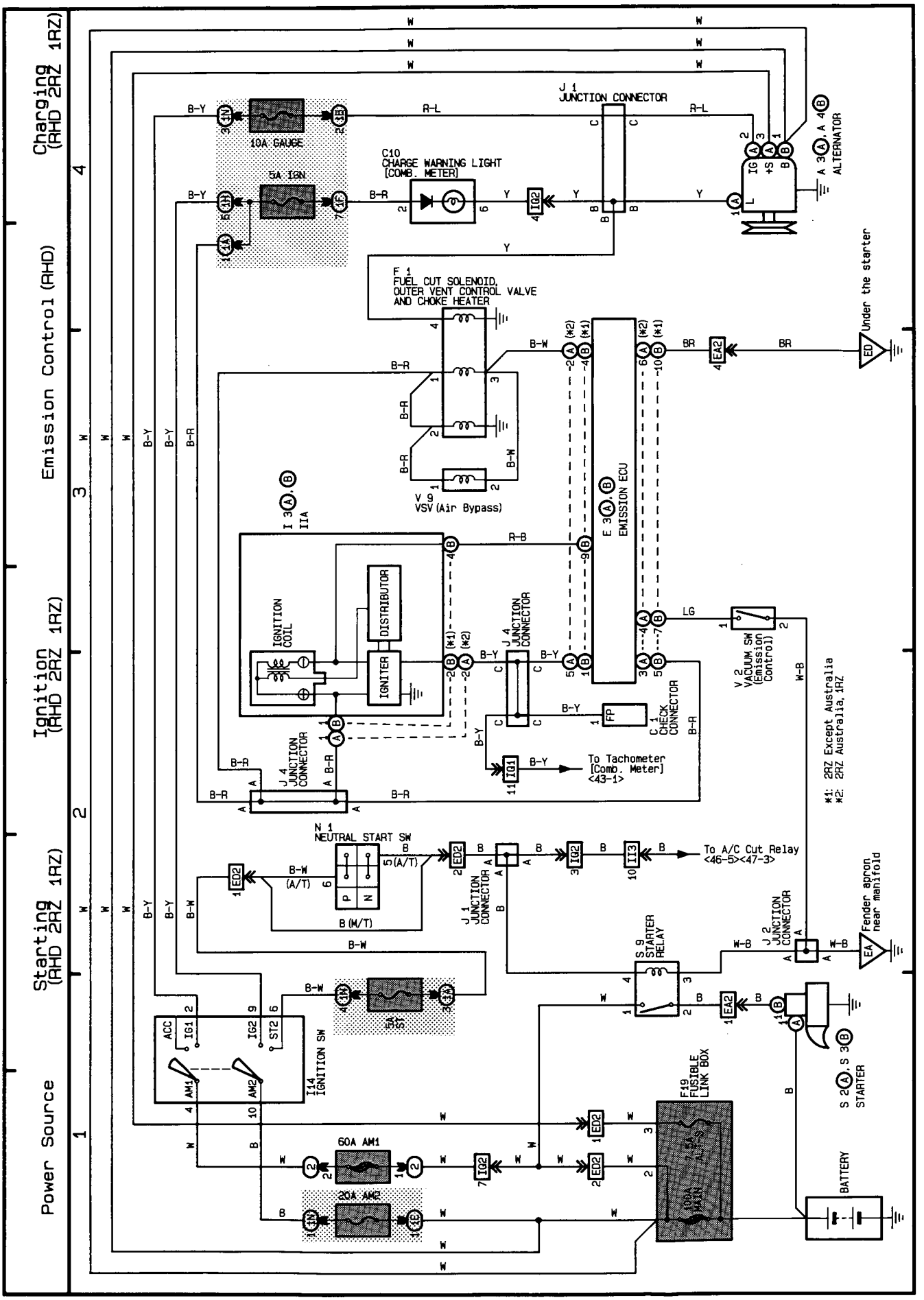
Charging (RHD 2RZ 1RZ)
Emission Control (RHD)
Ignition (RHD 2RZ 1RZ)
Starting (RHD 2RZ 1RZ)
Power Source
J 1 JUNCTION CONNECTOR
10A GAUGE
5A IGN
C10 CHARGE WARNING LIGHT [COMB. METER]
ALTERNATOR
F 1 FUEL CUT SOLENOID, OUTER VENT CONTROL VALVE AND CHOKE HEATER
Under the starter
V 9 VSV (Air Bypass)
EMISSION ECU
IGNITION COIL
DISTRIBUTOR
IGNITER
J 4 JUNCTION CONNECTOR
C 1 CHECK CONNECTOR
V 2 VACUUM SW (Emission Control)
To Tachometer [Comb. Meter] <43-1>
*1: 2RZ Except Australia
*2: 2RZ Australia, 1RZ
N 1 NEUTRAL START SW
To A/C Cut Relay <46-5><47-3>
J 1 JUNCTION CONNECTOR
S 9 STARTER RELAY
J 2 JUNCTION CONNECTOR
Fender apron near manifold
5A ST
I14 IGNITION SW
F19 FUSIBLE LINK BOX
60A AM1
20A AM2
STARTER
BATTERY